BLODGETT®

Project _____

Item No. _____

Quantity _____

1201 Single/Double/Triple

MODEL 1201
Electric Series Pizza Oven

Ovens consist of basic sections and are a complete and separate unit capable of operating alone or in combination.
All data is shown per oven section, unless otherwise indicated.

EXTERIOR CONSTRUCTION
- Full angle iron frame
- Stainless steel front, top and sides
- Aluminized steel back
- Counterbalanced doors with concealed hinges
- Heavy chrome plated tubular steel door handle
- Vitreous fiber insulation at top, back, sides, bottom and doors

INTERIOR CONSTRUCTION
- 36"D x 48"W x 10"H (914mm x 1219mm x 254mm) oven compartment interior
- Aluminized steel baking compartment liner
- Aluminized steel chamber
- Steel deck supported by an angle iron frame
- No. 12 gauge (3.02mm) press-formed, reinforced and flanged aluminized steel deck (Model No. 1201-S).

OPERATION
- 8 tubular-type heaters
- 4-position, heat selector switches
- Slide vent - each section
- Snap throttle thermostat with temperature control range of 200°F (93°C) to 650°F (343°C)

STANDARD FEATURES
- Fahrenheit dial 200°F to 650°F
- Steel oven deck
- Two year limited parts and labor warranty*

* *For all international markets, contact your local distributor.*

OPTIONS AND ACCESSORIES
(AT ADDITIONAL CHARGE)

- **Legs:**
  - ❑ 7" (152mm) black powder coated legs
  - ❑ 7" (152mm) stainless steel legs
  - ❑ 19" (445mm) black powder coated legs
  - ❑ 19" (445mm) stainless steel legs
  - ❑ 32" (787mm) black powder coated legs
  - ❑ 32" (787mm) stainless steel legs
- ❑ Ultra Rokite oven deck
- ❑ 440 or 460-480 VAC, 3-phase circuit
- ❑ Electric buzzer w/mechanical timer
- ❑ Casters
- ❑ Stainless steel crown angle trim
- ❑ Interconnector for double and triple deck units

OPTIONS AND ACCESSORIES
(AT NO ADDITIONAL CHARGE)

- ❑ 5 hour timer
- ❑ Celsius dial OFF to 300°C

Pizzaovens.com
Pizzaovens.com
1.877.FOR.OVEN
367.6836
Since 1999

BLODGETT®

MODEL 1201

APPROVAL/STAMP

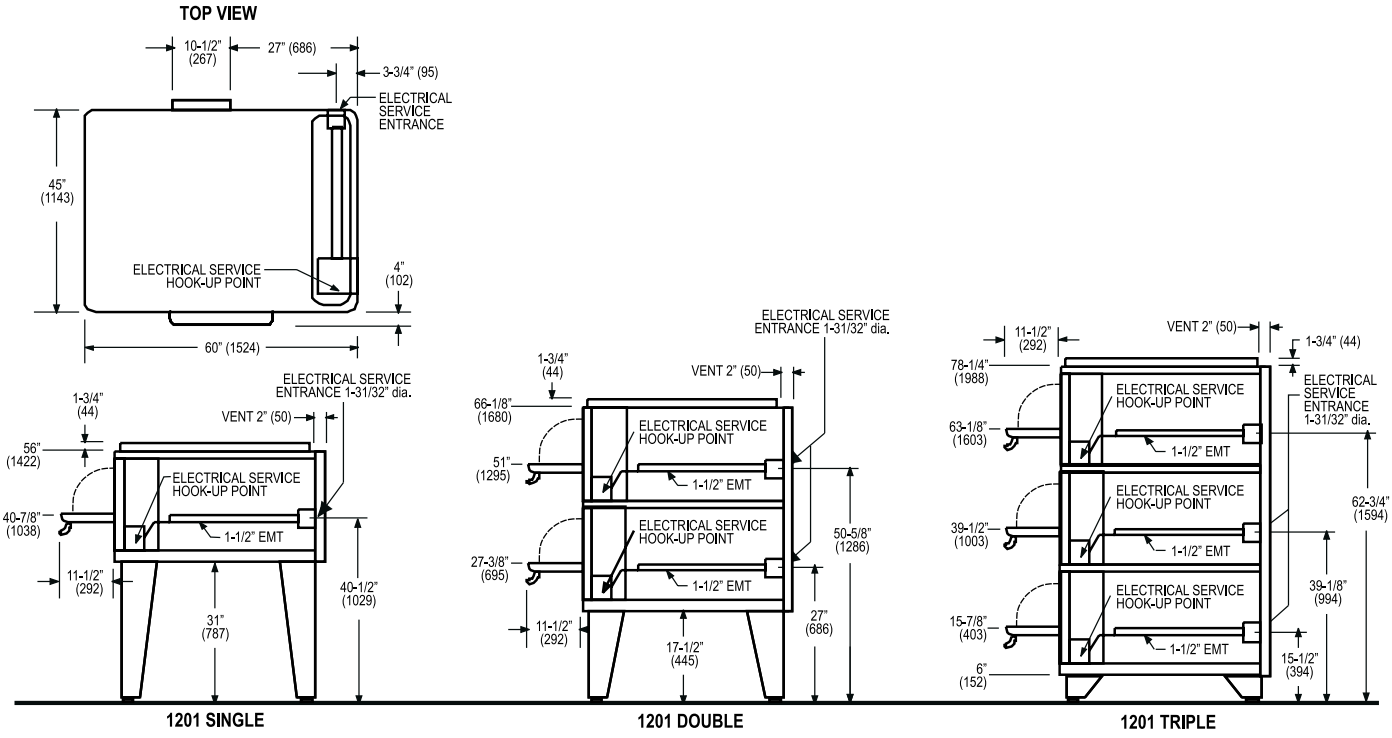

SHORT FORM SPECIFICATIONS

Provide Blodgett (single/double/triple) deck pizza oven, model 1201. Construction shall be stainless steel on front, top, back and sides, and shall be fully insulated on all sides. Oven shall be supported by formed adjustable steel legs. Door(s) shall be counterbalanced (no springs) with concealed hinges and chrome plated tubular steel handles. Baking compartment shall be lined with aluminized steel. Deck shall be 12 gauge press-formed, reinforced aluminized steel. Unit shall be electrically heated by eight (8) tubular-type heaters, controlled by 4-position heat selector switches and snap-action thermostat with range of 200°F to 650°F. Provide with two year limited parts and labor warranty. Provide with options and accessories as indicated.

DIMENSIONS:

Floor space:	60" (1524mm) W x 47" (1194mm) D
Interior:	48" (1219mm) W x 10" (254mm) H x 36" (914mm) D
Door opening:	46" (1168mm) x 10" (254mm)
Clearance below oven:	
Single:	31" (787mm)
Double:	17-1/2" (445mm)

ELECTRICAL RATING:

V.A.C.	Phase	K.W.H.	Amperes (L1-L2-L3)
208	1	10	48-0-48
208	3	10	24-42-24
220-240	1	10	42-0-42
220-240	3	10	21-36-21
440	3	10	12-20-12
460-480	3	10	11-18-11

Ovens can be phase loaded during hook-up to balance electric input. 50Hz ovens for use on 380, 400 & 415 VAC 4 wire systems are available.

MINIMUM ENTRY CLEARANCE:

Uncrated	26" (660mm)
Crated	31" (787mm)

SHIPPING INFORMATION:

Approx. Weight:	Crated	Uncrated
1201-Single:	660 lbs. (299kg)	620 lbs. (281kg)
1201-Double:	1320 lbs. (598kg)	1240 lbs. (562kg)
1201-Triple:	1980 lbs. (897kg)	1860 lbs. (843kg)

Crate size:
66" (1676mm) x 54" (1372mm) x 31" (787mm)

NOTE: *The company reserves the right to make substitutions of components without prior notice*

Pizzaovens.com
Pizzaovens.com 1.877.FOR.OVEN 367.6836
Since 1999