DOYON INC.
BAKING EQUIPMENT SPECIALISTS
SINCE 1950

FC18

"Superior quality product at an affordable price !"

FC18

FC18D

FC18-3

FC18-2

Pizzaovens.com
Your Complete Source for buying the right equipment

Conveyor ovens
FEATURING

- Compact and stackable (up to 3 high).
- Jets of high velocity hot air delivered to food.
- Faster consistent cooking than traditional, infrared and convection ovens.
- Guaranteed even baking.
- First in, first out.
- Allow inexperienced employees to produce quality products with a minimum of training.
- Bake pizzas in 5 to 6 minutes.
- Save on labor costs.
- Save on energy bills.
- 18" (457 mm) wide stainless steel belt with a 19 1/2" (495 mm) opening.
- Adjustable speed and temperature.
- Better moisture retention.
- Low maintenance and easy cleaning.
- Shipped fully assembled.
- Stand included.
- Temperature up to 600°F (300°C).
- Exhaust hood required above the unit(gas models).
- Available in gas or electric.
- ETL and ETL sanitation listed.
- One year parts and labor limited warranty.

OPTIONAL

- Front access glass door with a 18 1/4" X 5 3/8" (464 mm X 137 mm) opening (FC18D).
- Lock for control panel (FC18L).

FC18 Series conveyor ovens

Doyon fast conveyor ovens are your best buy to increase production in less space, bake 30% to 50% faster than traditional ovens, improve product consistency, reduce labor costs and minimize energy costs by 35% to 65%. Predetermine belt speed (cooking time) and temperature, place the food on the moving conveyor belt and remove for perfect results everytime. With a 19 1/2" X 3 3/4" (495 mm X 95 mm) opening and an increased production per square foot, Doyon conveyor ovens are not only the strongest of the industry, they are the most attractively priced of their category.

DIMENSIONS with stand (gas and electric models)

FC18	58"W	X 42 3/4"D	X 48 1/2"H
	(1475 mm)	X (1085 mm)	X (1230 mm)
FC18-2	58"W	X 42 3/4"D	X 60 3/4"H
	(1475 mm)	X (1085 mm)	X (1545 mm)
FC18-3	58"W	X 42 3/4"D	X 66 1/4"H
	(1475 mm)	X (1085 mm)	X (1685 mm)

BAKING CHAMBER DIMENSIONS

28 1/2"W X 19 1/2"D X 3 3/4"H
(724 mm) X (495 mm) X (95 mm)

GAS SYSTEM (FC18G - Natural or propane)
52 000 BTU per unit
120V - 1 PH - 8 A - 1 kW - 2 wires - 60 Hz NEMA 5-15P
220V - 1 PH - 5 A - 1 kW - 2 wires - 50 Hz
EXHAUST HOOD REQUIRED ABOVE UNIT

Gas inlet : 1/2" NPT

Recommended gas pressure:
Propane gas : 11" W.C.
Natural gas : 7" W.C.

ELECTRICAL SYSTEM (per unit)
FC18 :
120/208V - 1 PH - 59 A - 12 kW - 3 wires - 60 Hz
120/240V - 1 PH - 52 A - 12 kW - 3 wires - 60 Hz
120/208V - 3 PH - 39 A - 12 kW - 4 wires - 60 Hz
220V - 1 PH - 61 A - 13 kW - 2 wires - 50 Hz
220/380V - 3 PH - 24 A - 13 kW - 4 wires - 50 Hz

PRODUCTION PER HOUR PER UNIT (500°F/260°C - 5 min)
19 - 18" Pizzas
70 - 9" Pizzas
150 - 6" Pizzas

SHIPPING WEIGHT
700 lbs per unit (318 kg) approximately (electric unit)
800 lbs per unit (363 kg) approximately (gas unit)

Specifications and design subject to change without notice.

FC18

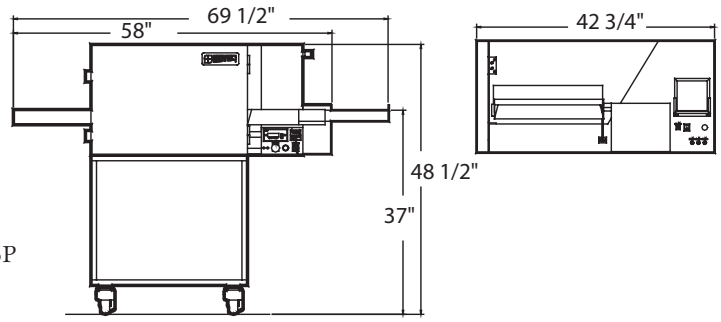

TOP VIEW
VUE DU DESSUS

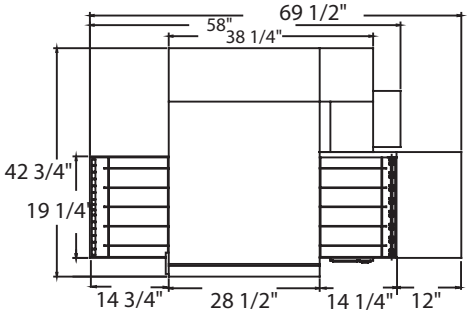

FC18 - 2

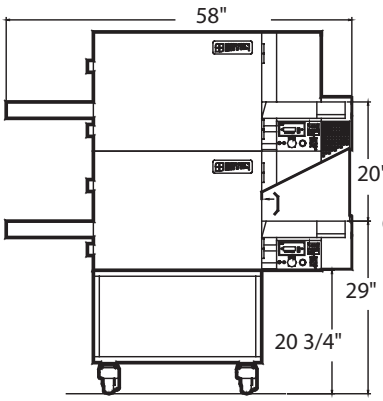

FC18 - 3

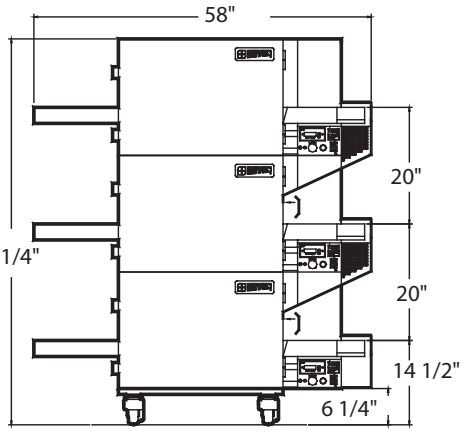

Pizzaovens.com
Pizzaovens.com
Your Complete Source
for buying the right equipment

DOYON INC.
BAKING EQUIPMENT SPECIALISTS
SINCE 1950

CERTIFIED ISO 9002

Your local distributor: / Votre distributeur:

Printed in Canada Rev: 072003a