Middleby Marshall®
CONVEYORS OF EXCELLENCE

AIA File No.:_____

Item No.:_____

PS220FS

Electrically Heated Conveyor Oven

PS220FS Single Unit

PS220FS-D Double Unit

Principle

Middleby Marshall PS Series Conveyor ovens bake both faster and at a lower temperature than other ovens. Patented vertical columns of hot air move heat aerodynamically instead of using high temperatures. The streams of hot air remove the boundary layers of cool heavy air which tend to insulate the product. This gives very rapid baking without burning. All Middleby ovens are designed to cook a multitude of products including pizza, seafood, bagels, Mexican, etc.

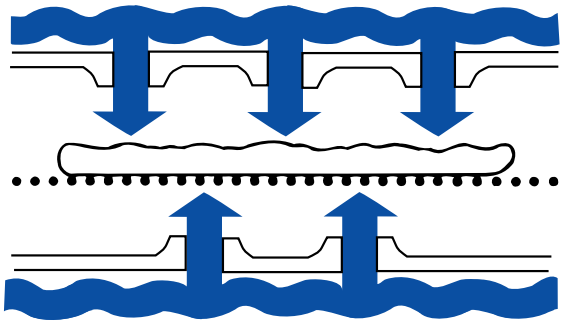

General Information

PS220FS conveyor ovens feature a 40.5" cooking chamber, a 20" wide conveyor belt, and a patented "Jet Sweep" convection process that delivers constant heat to the chamber. All ovens feature microprocessor controlled bake time/conveyor speed. Six adjustable jet fingers and front-loading window are standard. Ovens have stainless steel front, sides and top. All ovens include extra fan belt, installation kit, restraining cable, and 4' AGA flex hose. Heating is controlled in 8" adjustable zones. Top and bottom are independently adjustable. The conveyor drive is reversible. Conveyor belt provides automatic delivery when product is finished. Front loading window with cool handle design allows product with different bake times to be cooked consistently regardless of loading.

Special Features

PS220FS units are stackable two high, with tandem options available. Split belt option also available upon request.

Conserves Energy

Middleby ovens provide very efficient heat transfer to product. Energy is conserved as air is recycled from heater to product, with minimum flue or vent loss.

Cleanability

PS220FS ovens are designed for easy cleaning. Removable parts include: crumb pans, end panels, air fingers and a folding conveyor belt assembly for easy removal.

Easily Serviced

Control compartment is designed for quick and easy access. All electrical controls are door mounted.

Warranty

All PS220FS models have a one year parts and labor warranty. Oven start-up and demonstration are included at no additional charge (USA only).

Ventilation

For installation under a ventilation hood only.

NSF UL C UL

Form 4203

Pizzaovens.com
Pizzaovens.com
Your Complete Source
for buying the right equipment

Middleby Marshall Model PS220FS Electrically Heated Conveyor Oven

Baking chamber opening: 3.5" (88.9 mm).
Scale .25" (6.35 mm) = (304.8 mm) approx.

NOTE: All Figures In Parentheses Are In Millimeters

TOP VIEW

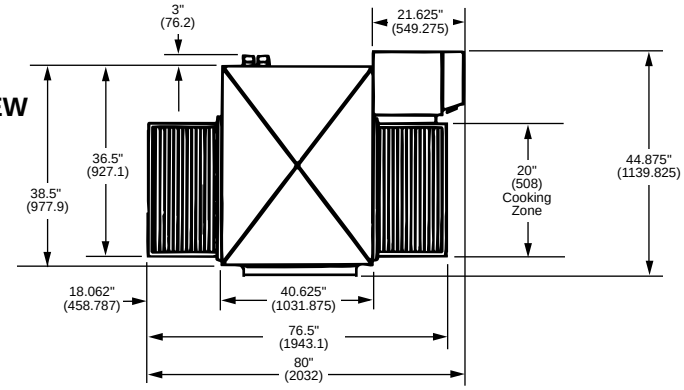

FRONT VIEW
PS220FS Single

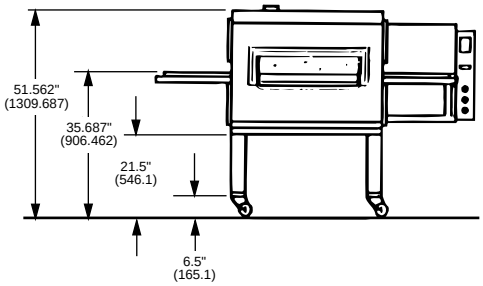

BACK VIEW
PS220FS Single

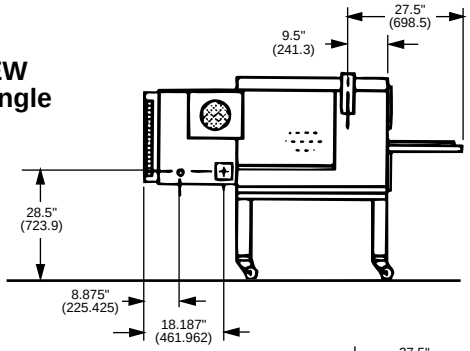

FRONT VIEW
PS220FS Double

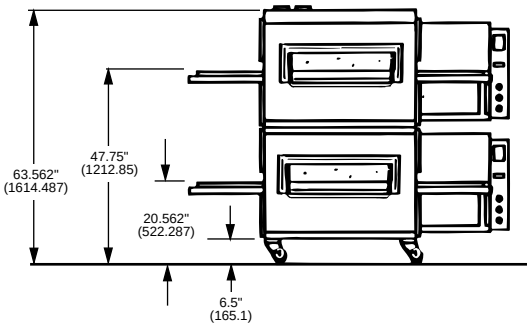

BACK VIEW
PS220FS Double

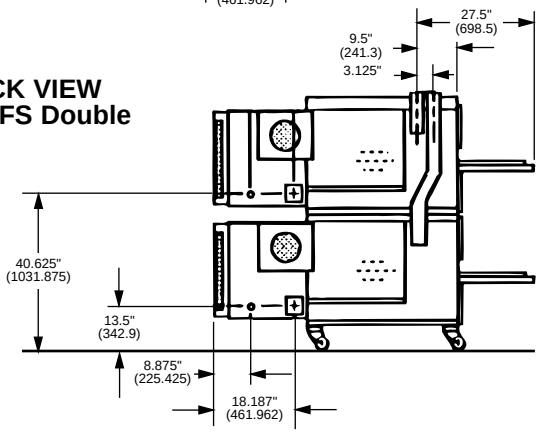

RECOMMENDED MINIMUM CLEARANCES

Rear of Oven to Wall	Left Conveyor Extension to Wall	Right Conveyor Extension to Wall (control panel side)
6" (152.4)	0"	18" (457.2)

GENERAL INFORMATION

	Heating Zone	Bake Chamber	Belt Width	Height	Length	Depth	Max. Operating Temp.	Bake Time Range	Ship Wt. (lbs.)	Ship Cube
PS220FS Single	40.5" (1028.7)	5.5 sq. ft. (.5109 sq. m)	20" (508)	51.5" (1308.1)	80" (2032)	44.875" (1139.825)	550° (287°C)	2 min., 40 sec. to 29 min., 50 sec.	925	132 ft.³
PS220FS Double	81" (2057.4)	11 sq. ft. (1.021 sq. m)	20" (508)	63.5" (1612.9)	80" (2032)	44.875" (1139.825)	550° (287°C)	2 min., 40 sec. to 29 min., 50 sec.	1850	264 ft.³

ELECTRICAL RATINGS

	Voltage	kW per oven	Phase	HZ	Connected load per Oven	Grounding	Breakers
Electric Single	208/240/480	28	3	60	78/75/37	3 pole, 4 wire	100 amp, 1.25" NPT
Electric Double	208/240/480	28	3	60	78/75/37	3 pole, 4 wire	200 amp, 1.25" NPT

∗Above specifications subject to change without notice.

Middleby Marshall®
A MIDDLEBY COMPANY

Pizzaovens.com
Established 1999